Alle Rechte vorbehalten/ *All rights reserved*

RECOMMENDED PANEL CUTOUT DIMENSIONS

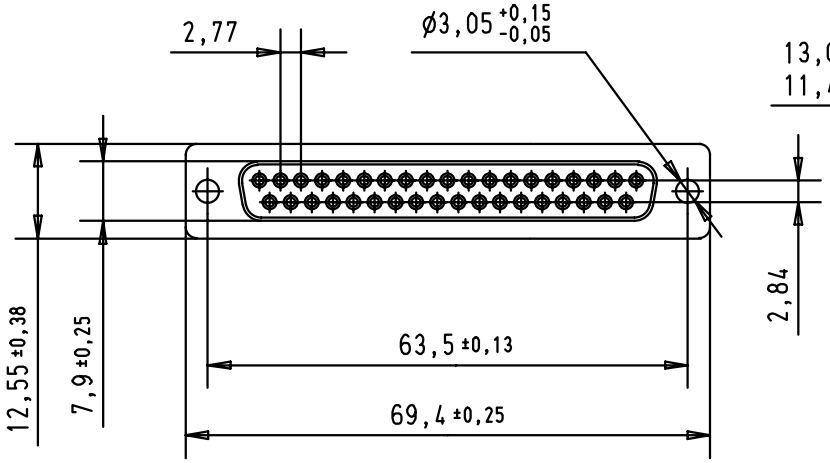

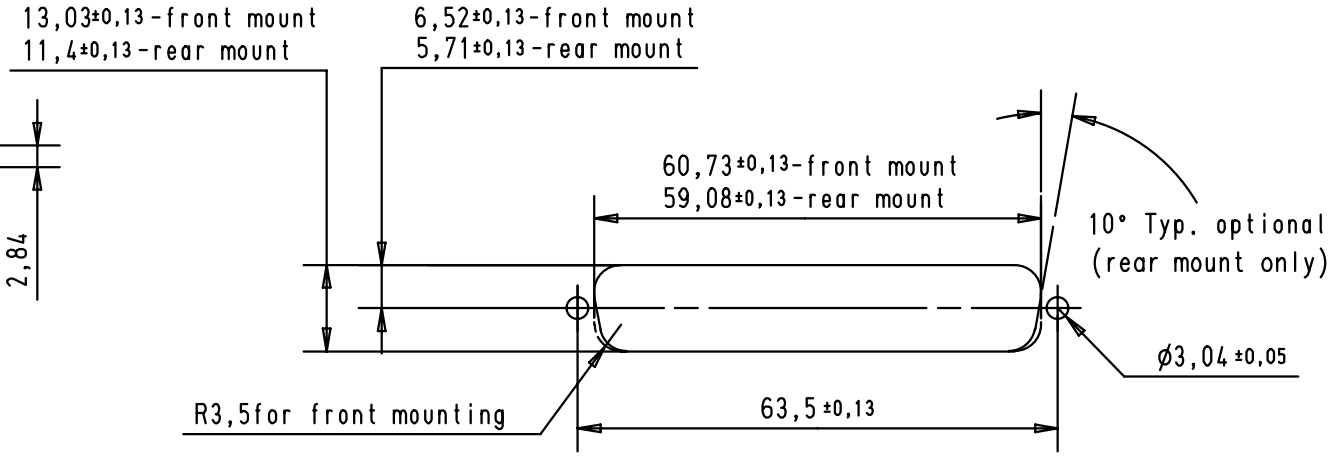

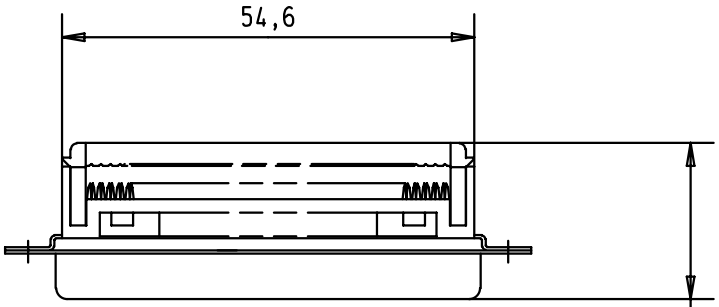

20,65 pre-crimping position

18,20 after cimping position

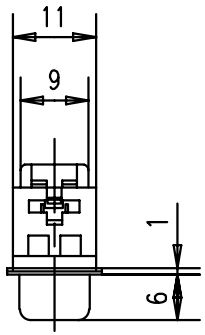

1.27 mm pitch flat cable stranded, wire sizes : AWG 26 to 28

part number	No of contact	performance level	
09 66 418 7500	37	3	
09 66 418 6500	37	2	
09 66 418 5500	37	0.76 µm Au	

Mod.	Dat.	Name
29771	16-APR-02	CV
29756	19-MAR-02	CV
29697	09/07/01	S.H.

	Dat.	Name
Detail.	09/07/01	S.H.
Insp.		
Stand.		

All Dim. in mm
Orig. Size DIN A 4

HARTING ELEKTRONIK
F-95972 Paris

D-Sub female connector
Insulation displacement termination through holes fixing

Maßstab/ *Scale* 1 : 1

TB 0966 418 x500

Sub.

Blatt/ *Page* 1